Vehicle Control Unit MS 50.4

- 667 MHz Dual Core Processor exclusively for vehicle control functionality (MATLAB based)
- Identical, dedicated 667 MHz Dual Core Processor exclusively for logging purposes
- High Speed Logging 200 kHz of 6 analog inputs (optional)
- Event logging, Configurable pre-event logging

The VCU MS 50.4 is a highly powerful processing / logging unit for race applications.
Based on our broad base of platform function, we support you with customized VCU functions for a tailor-made solution.
In addition, you can quickly develop your individual customer software based on MATLAB/Simulink to significantly speed up algorithm development (automatic code and documentation generation, requires CCA package) – including extensive simulation capabilities.

Application

Processor for customer code	667 MHz Dual Core
Processor for logger	667 MHz Dual Core
Configurable math channels	
User configurable CAN in/out messages	
Online data compression	
Internal logger • 1,500 channels • FULL_LOG_1 (4 GB memory on Partition 1) enabled • FULL_LOG_2 (4 GB memory on Partition 2) enabled • High Speed Logging Package (Sampling rate 5 µs) optional • DATA_USB (Data copy to USB flash drive) enabled	
Logging rates • Usage of all features: 600 kB/s • Primary logging use case: >1,200 kB/s • Logging data download rate: up to 6.2 MB/s	
LTE Ethernet telemetry support	
RS232 interface for GPS	

Technical Specifications

Mechanical Data

Size	166 x 121 x 41 mm
Weight	≤ 660 g
Protection classification	IP67
3 motorsport connectors, 198 pins in total	
Max. vibration	Vibration profile 1
Operating temperature internal	-20 to 80°C

Electrical Data

Supply voltage	5 to 18 V

Inputs

20 Analog channels 0 to 5 V, 0.5 % precision between 0.2 and 4.8 V, switchable pull-up
8 Digital PWM inputs f_max=30 kHz Hall-type speed measurement possible, Switchable pullup 2.15 kOhm, (required for Hall), Tooth count differential*
4 Digital PWM inputs f_max=30 kHz Hall- and DF11 type speed measurement possible, Fixed pullup 2.15 kOhm (required for Hall), Tooth count differential*
4 x universal Thermocouple
1 x Bosch Laptrigger
1 x TimeSync master and slave (specific to Bosch measurement system)
Internal measurements:

1 x ambient pressure
1 x ECU temperature
20 x supply voltage
20 x supply current
1 x battery voltage (external VCU supply)
1 x external VCU supply current
4 x HS output current
1 x 3-axis acceleration plus roll/pitch/yaw rate

Outputs

2* x 7.5 A each, PWM High side, 50 Hz

4* x 2.2 A each, PWM Low side, 10 kHz

*can be enhanced by Upgrade I/O Package

Sensor Supplies and Screens

5* x 12 V, 400 mA each

5* x Switchable 5 V/12 V, 400 mA each

4 A max overall current on all 12 V
2 A max overall current on all 5 V

12 V ± 1 % precision on the pin
5 V ± 0.1 % precision on the pin

20 x Sensor ground

*can be enhanced by Upgrade I/O Package

Adaptation and Documentation

Function documentation	Automatically created during code generation
MatLab code generation	Support for customer own MatLab function development

Software Tools (free download)

Data Analysis tool WinDarab 7	
System Configuration tool RaceCon	Logger configuration, calibration, and online measurement

Connectors

Connector LIFE (red) AS018-35PN	Mating connector AS618-35SN (not included)
Connector SENS-A (yellow) AS018-35PA	Mating connector AS618-35SA (not included)
Connector SENS-B (blue) AS018-35PB	Mating connector AS618-35SB (not included)

Communication

3 Ethernet 100 Mbit

4 CAN (+4 with Upgrade I/O Package)

1 LIN

1 USB

1 RS232 interface for GPS or Telemetry, switchable depending on SW version

1 Time sync synchronization Ethernet

Installation Notes

Maintenance Interval: 220 h or a maximum of two years

Please remember that the mating connectors and the programming interface MSA-Box II are not included and must be ordered separately.

Legal Restrictions

Generally blocked are direct and indirect business involving high risk destinations, including Russia, Belarus, Cuba, Iran, North Korea, Syria, Libya, Afghanistan, and certain non-governmental controlled Ukrainian regions. This list may change as geopolitics evolve.

Upgrades

CCA Hardware Upgrade per device

Provides the option to run customer developed software code on Bosch device

Multi CCA Hardware Upgrade per device

Enables the use of an extra core to utilize more computing power in the device

I/O Package

Communication

4 CAN

Inputs

4 Analog channels
0 to 5 V,
0.5 % precision between 0.2 and 4.8 V, switchable pull-up

4 Digital PWM inputs
f_max=30 kHz
Hall-type speed measurement possible,
Fixed pullup 2.15 kOhm (required for Hall),
Tooth count differential**

4 LVDT, 5 pin configuration,
excitation frequency 1 to 20 kHz,
excitation voltage 0 to 5 V (rms)

Outputs

4 “TTL” Digital output, 10 kHz, PWM, 25 mA each

2 PWM High side; 7.5 A each, PWM, 50 Hz

4 PWM Low side; 2.2 A each, PWM, 10 kHz

Power Supplies

5 x12 V, 400 mA each

5 switchable 5 V/12 V, 400 mA each

** The tooth count differential between any two of the PWM inputs is available to measure e.g., shaft torsion.

High Speed Logging Package

6 ANA	0 to 5 V, 200 kHz logging rate

CCP/XCP_MASTER

Enables CCP/XCP master functionality to request data from foreign devices via CAN/CCP protocol, XCP over Ethernet (UDP) or XCP via CAN.
(ASAP2 file from ECU manufacturer required)

Ordering Information

Vehicle Control Unit MS 50.4
Order number **F02U.V02.965-02**

Vehicle Control Unit MS 50.4 incl. CCA Hardware Upgrade
Order number **F02U.V03.012-01**

Rugged USB flash drive
Order number **F02U.V03.534-01**

Connector for USB flash drive on car loom side
Order number **F02U.002.996-01**

Adapter cable to PC USB-Port
Order number **F02U.V01.343-01**

Breakout Box BOB 66-pole
Connector code: blue
Order number **F02U.V02.295-01**

Breakout Box BOB 66-pole
Connector code: yellow
Order number **F02U.V02.298-01**

Breakout Box BOB MS 7
Connector code: red
Order number **F02U.V02.293-01**

Software Options

CCA Hardware Upgrade per device
Order number **F02U.V02.137-01**

Multi CCA Hardware Upgrade VCU per device
Order number **F02U.V03.222-01**

I/0 Package
Order number **F02U.V02.777-01**

High Speed Logging Package
Order number **F02U.V02.779-01**

CCP/XCP_MASTER
Order number **F02U.V02.213-01**

Accessories

Opening tool for shellsize 18
Order number **F02U.V01.394-01**

Dimensions

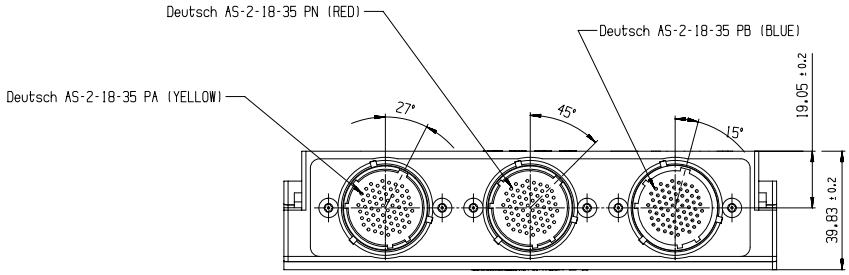

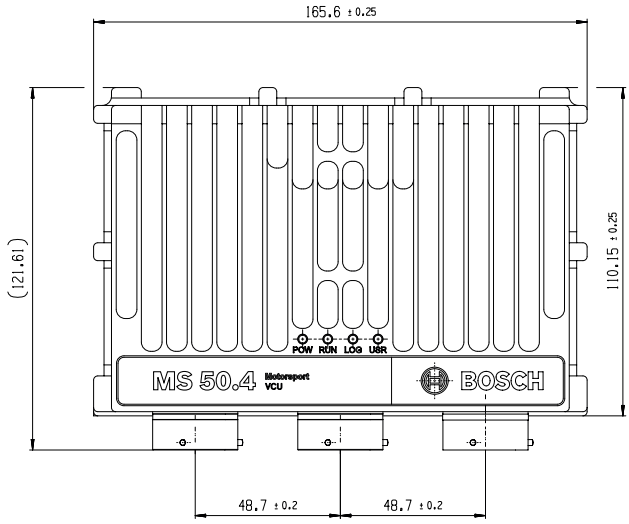

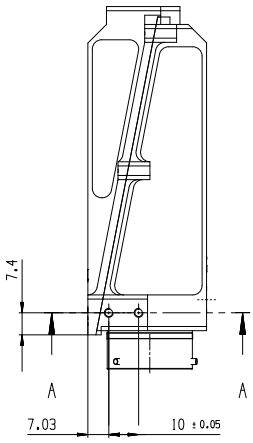

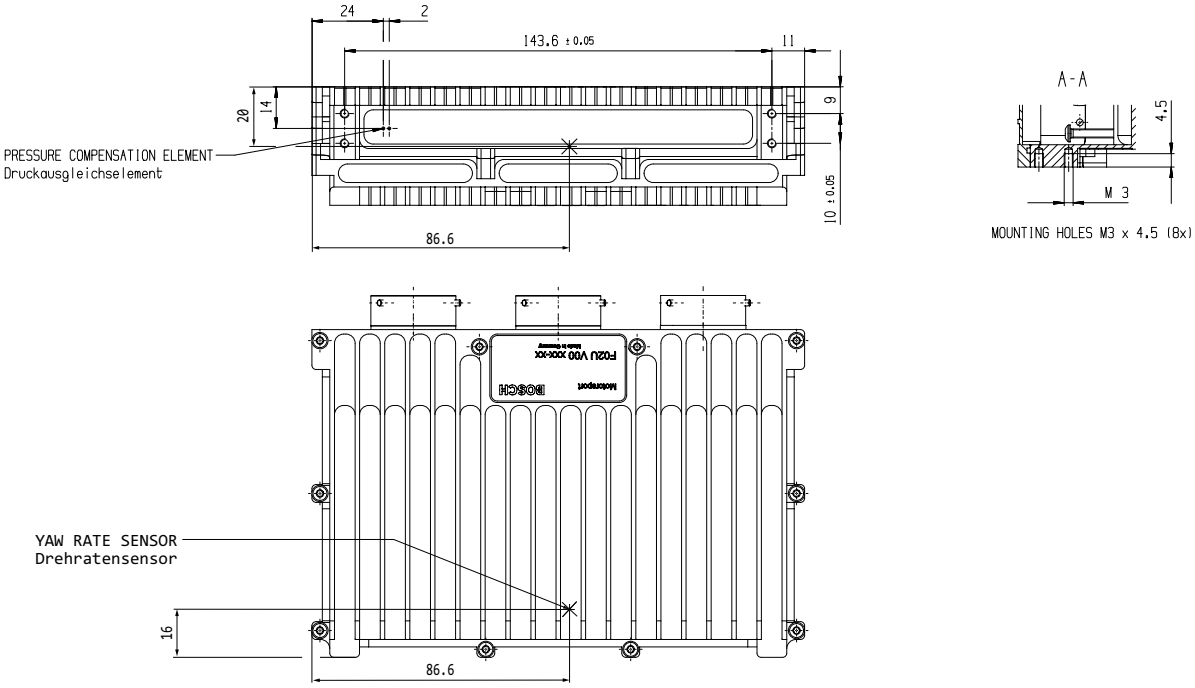

.

Represented by:

Europe:
Bosch Engineering GmbH
Motorsport
Robert-Bosch-Allee 1
74232 Abstatt
Germany
motorsport@bosch.com
www.bosch-motorsport.de

North America:
Bosch Engineering North America
Motorsport
38000 Hills Tech Drive
Farmington Hills, MI 48331-3417
United States of America
motorsport@bosch.com
www.bosch-motorsport.com

Asia-Pacific:
Bosch Engineering Japan K.K.
Motorsports Department
1-9-32 Nakagawachuo, Tsuzuki-ku
Yokohama-shi
Kanagawa, 224-8601
Japan
motorsport@jp.bosch.com
www.bosch-motorsport.jp

Australia, New Zealand and South Africa:
Robert Bosch Pty. Ltd
Motorsport
1555 Centre Road
Clayton, Victoria, 3168
Australia
motor.sport@au.bosch.com
www.bosch-motorsport.com.au

© Bosch Engineering GmbH 2026 | Data subject to change without notice
234686731 | en, , 27. Mar 2026